202 SERIES
HPA

Designed for cylinders, hand pumps and similar high hydraulic applications.
Ball or Poppet valve closing system available.
NPTF Threads. Other threads upon request.

• Materials

	CARBON STEEL	STAINLESS STEEL
Body	*Carbon Steel EN-10277-3*	*AISI 316L*
Seals	*NBR, Viton or EPDM*	*NBR, Viton or EPDM*
Balls	*AISI 1010/1015*	*AISI316 W. 14401*
Springs	*Carbon Steel DIN 17233/84(B)*	*AISI302 DIN 17224*

• Applications:
Designed for Oil hydraulic Applications according to European Directive 97.23.EC

• Equivalence:
ENERPAC C-604

CEJN 230

PARKER 3000

• Working temperature (Seals)

	NBR	Viton	EPDM
	+100ºC	+200ºC	+150ºC
	-30ºC	-10ºC	-40ºC

• Sectors: Industrial

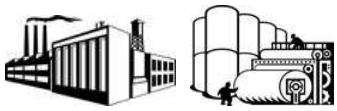

MODEL STRUCTURE

Example;

202. 12242 BN

Series	Material	Part	Closing	O-Ring	Size	Thread
202.	**1** → Carbon St. **2** → AISI 316	**1** → Male **2** → Female	**1** → Poppet V **2** → Ball	**0** → Without **2** → Viton **4** → NBR 90Sh	DN **1** → 06 ¼" **2** → 10 ⅜"	2 letters as per Table of threads

INTEVA S.A. Reserves the right to make modifications in its products without prior notice

202 SERIES
HPA

POPPET VALVE

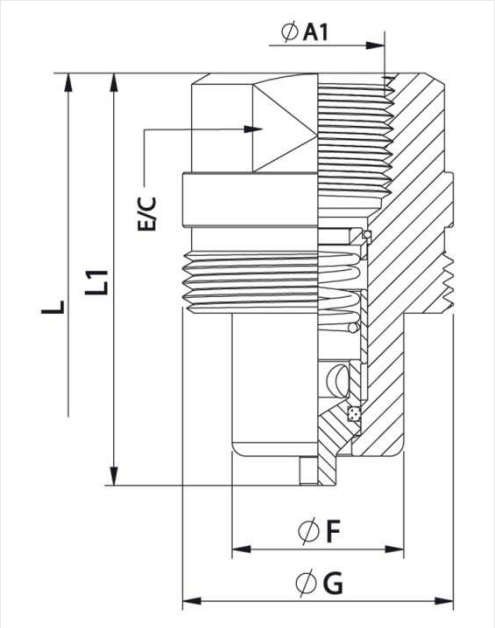

STANDARD *MALE* MODELS

DN	ØA1	REF.		E/C	ØG	L1	ØF	L
06	¼" NPTF	202.11141BB	1200Bar	19	1" UN	38	15,90	60,50
10	⅜" NPTF	202.11142BC	1200Bar	24	1 3/16" UN	44,70	18,99	72,75

STAINLESS STEEL *MALE* MODELS

DN	ØA1	REF.		E/C	ØG	L1	ØF	L
06	¼" NPTF	202.21121BB	1200Bar	19	1" UN	38	15,90	60,50
10	⅜" NPTF	202.21122BC	1200Bar	24	1 3/16" UN	44,70	18,99	72,75

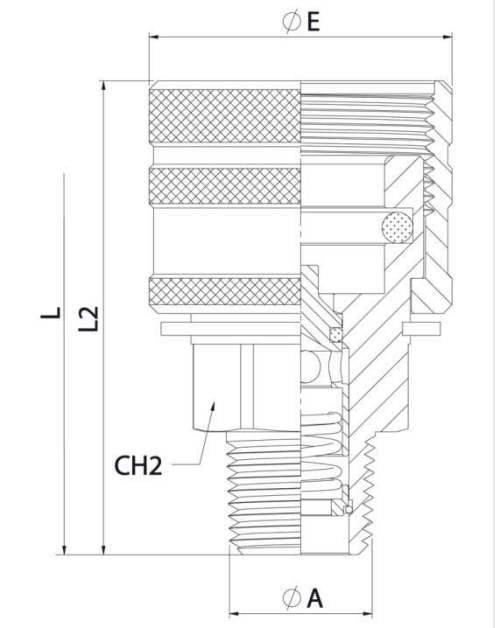

STANDARD *FEMALE* MODELS

DN	ØA	REF.		CH2	L2	ØE	L
06	¼" NPTF M.	202.12141BM	1200Bar	17	41	30	60,50
10	⅜" NPTF M.	202.12142BN	1200Bar	22	54	34,50	72,75

STAINLESS STEEL *FEMALE* MODELS

DN	ØA	REF.		CH2	L2	ØE	L
06	¼" NPTF M.	202.22121BM	1200Bar	17	41	30	60,50
10	⅜" NPTF M.	202.22122BN	1200Bar	22	54	34,50	72,75

INTEVA S.A. Reserves the right to make modifications in its products without prior notice

202 SERIES
HPA

BALL VALVE

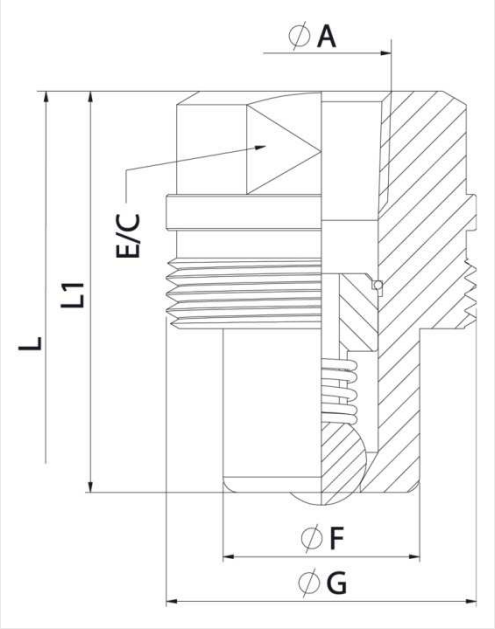

STANDARD *MALE* MODELS

DN	ØA	REF.		E/C	ØG	L1	ØF	L
06	¼" NPTF	202.11201BB	700Bar	19	1" UN	34	15,90	75,5
10	⅜" NPTF	202.11202BC	700Bar	24	1 3/16" UN	38,88	18,99	87,14

STAINLESS STEEL *MALE* MODELS

DN	ØA	REF.		E/C	ØG	L1	ØF	L
06	¼" NPTF	202.21201BB	700Bar	19	1"UN	34	15,90	75,5
10	⅜" NPTF	202.21202BC	700Bar	24	1 3/16" UN	38,88	18,99	87,14

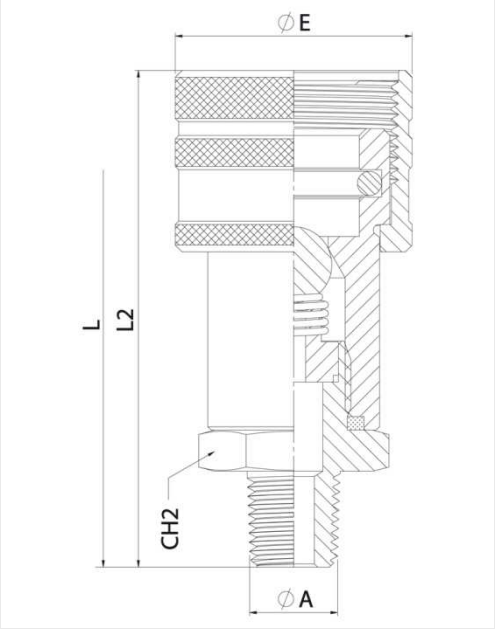

STANDARD *FEMALE* MODELS

DN	ØA	REF.		CH2	L2	ØD	L
06	¼" NPTF M.	202.12241BM	700Bar	19	53	30	75,5
10	⅜" NPTF M.	202.12242BN	700Bar	24	64	34,50	87,14

STAINLESS STEEL *FEMALE* MODELS

DN	ØA	REF.		CH2	L2	ØD	L
06	¼" NPTF M.	202.22221BM	700Bar	19	53	30	75,5
10	⅜" NPTF M.	202.22222BN	700Bar	24	64	34,50	87,14

INTEVA S.A. Reserves the right to make modifications in its products without prior notice

202 SERIES HPA

PLUGS & CAPS

HPA SERIES PLUGS and CAPS have been designed to protect FEMALE (coupler) or MALE (nipple) parts while they are disconnected.

MODEL STRUCTURE

Example;

202.6302 AA

Series	Material	Part	Colour	Size	Standard
202.	**2** → AISI 316 **5** → Plastic **6** → Aluminium	**3**→ Plug **4**→ Cap	**0** → Plain Metal 5 → Black	DN **1**→ ¼" 06 **2**→ ⅜" 10	AA

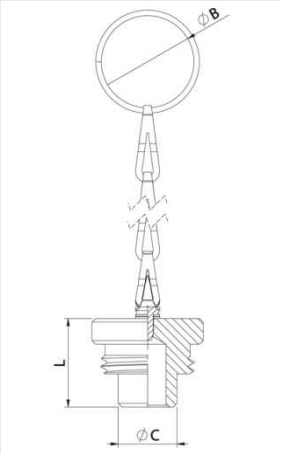

METAL PLUG

DN	ALUMINIUM	AISI 316	ØC	L	ØB
06	202.6301AA	202.2301AA	15,85	24	25
10	202.6302AA	202.2302AA	19	28	30

PLASTIC PLUG

DN	PLASTIC	ØC	L	ØB
06	202.5351AA	15,7	24	25
10	202.5352AA	19	28	30

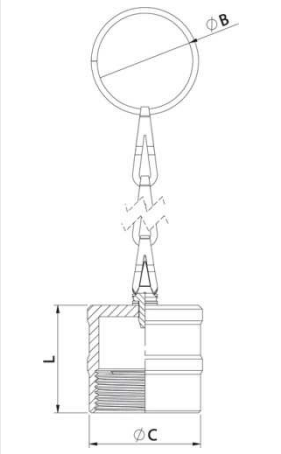

METAL CAP

DN	ALUMINIUM	AISI 316	ØC	L	ØB
06	202.6401AA	202.2401AA	29	28	25
10	202.6402AA	202.2402AA	34	34	30

PLASTIC PLUG

DN	PLASTIC	ØC	L	ØB
06	202.5451AA	15,7	24	25
10	202.5452AA	19	28	30

INTEVA S.A. Reserves the right to make modifications in its products without prior notice